PRODUCT DATASHEET

TNC END LAUNCH PCB JACK

13-410-1.57mm-Q3

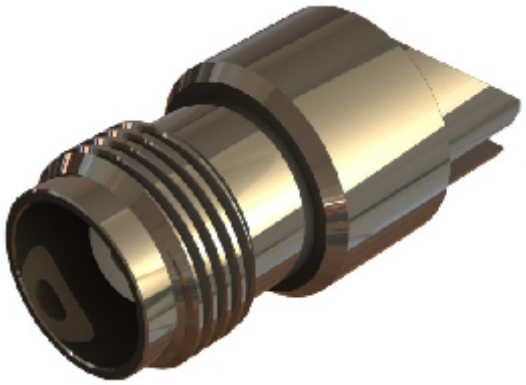

images for illustration purposes only

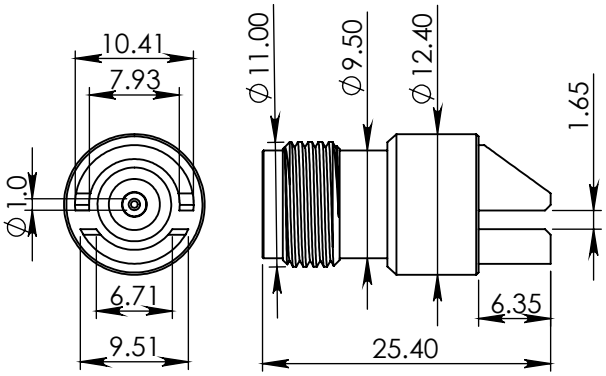

ITEM	DESCRIPTION	MATERIAL	PLATING
4	CENTRE CONTACT	PhBr	GOLD
3	BODY	BRASS	WHITE BRONZE
2	INNER RETAINING RING	BRASS	WHITE BRONZE
1	INSULATOR	PTFE	N/A

A4	SHEET 1 OF 1	RoHS 2002/95/EC	DIMENSIONS ARE IN MILLIMETRES	
REVISION : A03		NAME	SIGNATURE	DATE
ISSUE : 0		DRAWN	IG	09/03/2011
		CHK'D	GE	16/03/2011
		APPV'D		

6-8 COLNE ROAD,
TWICKENHAM,
MIDDLESEX.
TW1 4JR

THE INFORMATION IS GIVEN AS AN INDICATION ONLY AND IS SUBJECT TO CHANGE WITHOUT NOTICE. IN THE CONTINUAL GOAL TO IMPROVE OUR PRODUCTS,WE RESERVE THE RIGHT TO MAKE ANY MODIFICATIONS NECESSARY WITHOUT PRIOR NOTICE.

Suitable for Cables:

N/A

Recommended PCB Layout

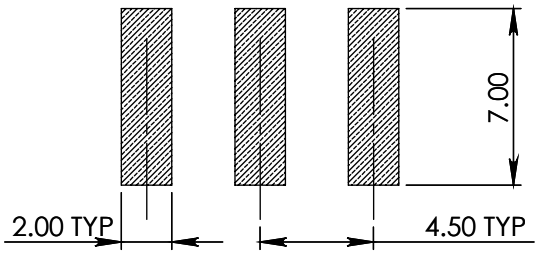

Assembly Procedure: N/A

Tooling

Centre Contact: Not Applicable Tool No: Not Applicable

Crimp Sleeve: Not Applicable Tool No: Not Applicable

Environmental Specification

Operating Temp: -55 to +155 Deg C.

IP Rating (Mated): IP64

Electrical Specification

Impedance: 50 Ohm

Frequency: 0-3 GHz

Dielectric W/V: 1500 Veff

Insulation res: 5000 M-Ohm

Mechanical Specification

Contact Retention: 10 N min

Cable Retention: N/A

Mating cycles: 250

Weight: 13.07 g

Connector Interface

image for illustration purposes only

© 2011. THIS DOCUMENT IS THE PROPERTY OF COAX CONNECTORS LTD. REPRODUCTION OR COMMUNICATION IN ANY FORM TO A THIRD PARTY IS PROHIBITED WITHOUT PRIOR WRITTEN CONSENT

Model File: S:\CAD SYSTEM\Engineering Data\CAD Data\Solid Models\Z - Match IT SERIES\TOP LEVEL\TNC 10034

Cad File: S:\CAD SYSTEM\Engineering Data\CAD Data\Drawings\Z - Match IT SERIES\DATA SHEETS\13-410-1.57mm-Q3

Tel: +44(0)20 8538 9090 Fax: +44(0)20 8538 9890 Email: info@coax-connectors.com